CHEMICAL ENGINEERING 2O04 - Assignment #3

Dr. D.R. Latulippe Due: At 7:00pm on Thu Mar 5th

Notes:

- As per the course outline, full credit is given for completion; thus, your submission will NOT be graded for correctness.
- Your single PDF submission to the Avenue course page should include all your solutions to the questions below.

QUESTION 1

Water (at 10 °C) is flowing in a turbulent fashion through a horizontal pipe (internal diameter = 10 cm) at an average velocity of 1.2 m/s.

a) Confirm that the flow is indeed turbulent by calculating the Reynolds number.

Formula for Reynolds number (Re): $Re = \frac{\rho V_{avg} D}{\mu} \; or \; \frac{V_{avg} D}{\nu}$

From Table A.8, the kinematic viscosity (ν) of water @ 10 °C = 1.3e^{-6} m^2/s

$$Re = \frac{(1.2\, {}^{m}/_{s})(0.1m)}{1.3e^{-6}\ \mathrm{m}^2/_{s}} = 92{,}300$$

Since Re >> 4000, the flow is turbulent.

b) As discussed in lecture, the turbulent velocity profile is well-described by the empirical power-law equation:

$$\overline{v_z} = \overline{v_{z,max}} \left[1 - \frac{r}{R}\right]^{1/n}$$

Plot the average axial velocity ($\overline{v_z}$) for n = 6 and n = 10. To match the physical nature of the system, plot the average axial velocity ($\overline{v_z}$) on the x-axis and the radial position (r) on the y-axis; the range of r values should be from 0 to +R where R is the radius of the pipe.

From slide 27 of PDF_05 notes:

for n = 6, $\frac{\overline{v_{z,\,avg}}}{\overline{v_{z,max}}}$ =0.79 and so $\overline{v_{z,max}} = 1.52\, {}^{m}/_{s}$

for n = 10, $\frac{\overline{v_{z,\,avg}}}{\overline{v_{z,max}}}$ =0.87 and so $\overline{v_{z,max}} = 1.38\, {}^{m}/_{s}$

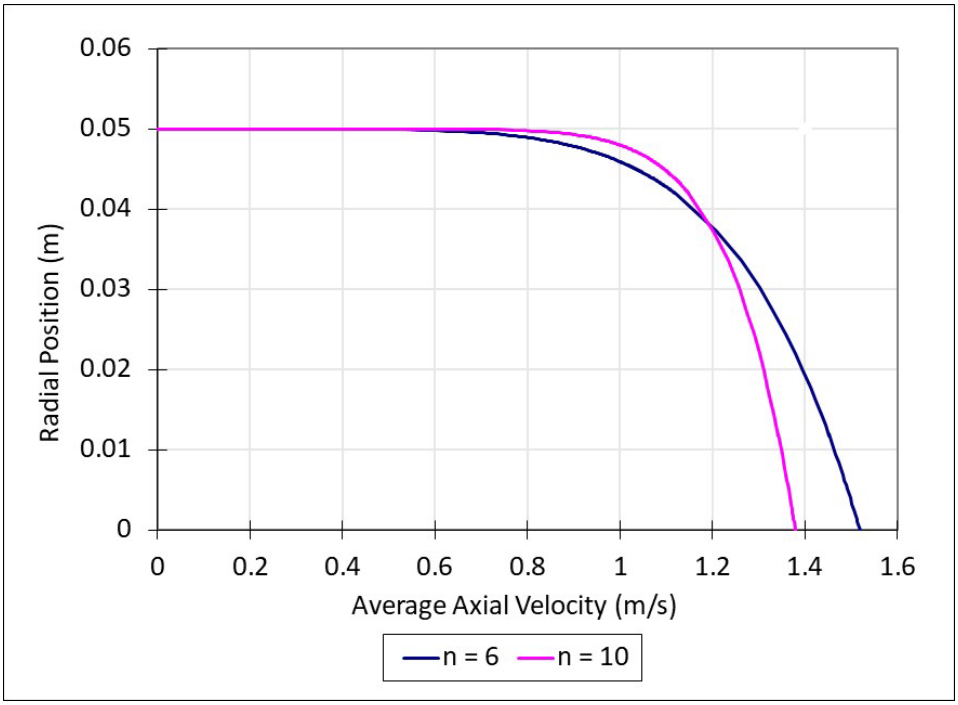

c) Two Pitot tubes (designated A & B) are located at different radial positions in the tube and are used to measure the local velocity fluctuations that occur due to the turbulent nature of the flow. In an experiment, the following eight velocity measurements were collected:

Pitot ID	Pitot Location	Velocity measurements (m/s)							
A	r = +0.012 m	1.34	1.39	1.43	1.40	1.46	1.35	1.39	1.45
B	r = +0.042 m	1.11	1.12	1.14	1.13	1.18	1.15	1.20	1.30

For each pitot tube calculate the average and standard deviation of the velocity measurements. Then re-do the plot from b) but now include on your graph the average velocity values (with x-axis error bars that correspond to the standard deviation) at their respective positions.

Pitot ID	Pitot Location	Average velocity (m/s)	Standard deviation velocity (m/s)
A	r = +0.012 m	1.40	0.04
B	r = +0.042 m	1.16	0.06

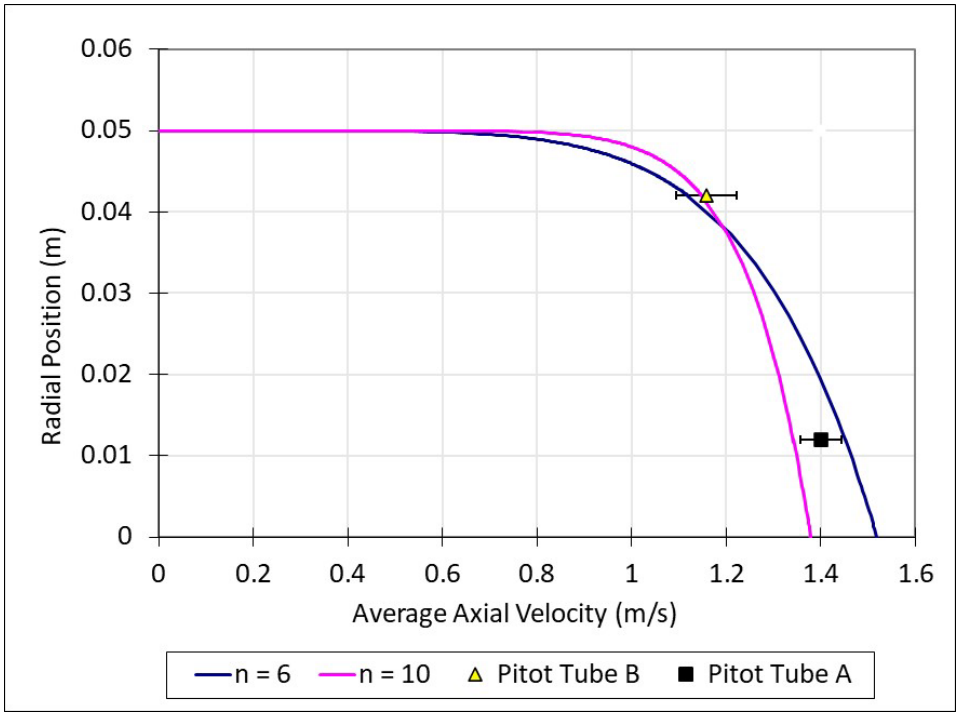
0.06
0.05
0.04
0.03
0.02
0.01
0
Radial Position (m)
0
0.2
0.4
0.6
0.8
1
1.2
1.4
1.6
Average Axial Velocity (m/s)
n = 6
n = 10
Pitot Tube B
Pitot Tube A

QUESTION 2

A naval engineer proposes to change the standard cylindrical periscope housing to a more streamlined one - the dimensions of the two shapes are shown in the figure below. Calculate the drag force for each design if the submarine travels in 10 °C water at 20 km/h.

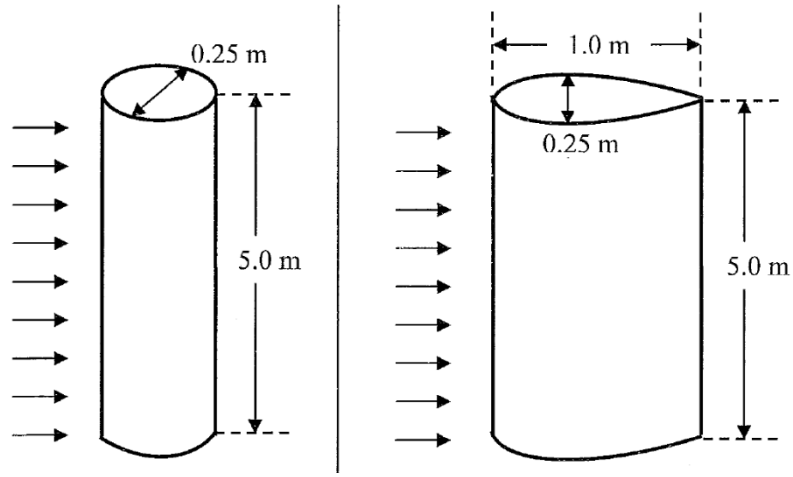

From slide 16 of PDF_06 notes: $F_{drag} = \frac{1}{2}\rho V^2 A_P C_D$

Given information $V = 20\frac{km}{h}\frac{1000m}{1km}\frac{1h}{3600s} = 5.56\,{}^{m}/_{s}$

From Table A.8:

- the kinematic viscosity (ν) of water @ 10 °C = 1.3e^{-6} m^2/s
- the density (ρ) of water @ 10 °C = 1000 kg/m^3

Cylindrical Design	Streamlined Strut Design
From figure on slide 25 of PDF_06 notes, for cylinder of diameter d: $Re = \frac{Vd}{\nu} = \frac{(5.56\,{}^{m}/_{s})(0.25m)}{1.3e^{-6}\ \mathrm{m}^2/_{s}} = 1.07e^6$	From figure on slide 25 of PDF_06 notes, for streamlined strut of thickness b: $Re = \frac{Vb}{\nu} = \frac{(5.56\,{}^{m}/_{s})(0.25m)}{1.3e^{-6}\ \mathrm{m}^2/_{s}} = 1.07e^6$
From figure on slide 25 of PDF_06 notes, for cylinder of diameter d at Re = 1.07e^6, C_D ~0.26	From figure on slide 25 of PDF_06 notes, for streamlined strut of thickness b at Re = 1.07e^6, C_D ~0.035
Projected area of the body normal to the flow (A_P) = 0.25m × 5 m = 1.25 m^2	Projected area of the body normal to the flow (A_P) = 0.25m × 5 m = 1.25 m^2
$F_{drag} = \frac{1}{2}\left(1000\frac{kg}{m^3}\right)(5.56\,{}^{m}/_{s})^2(1.25m^2)0.26$	$F_{drag} = \frac{1}{2}\left(1000\frac{kg}{m^3}\right)(5.56\,{}^{m}/_{s})^2(1.25m^2)0.035$
$\boldsymbol{F_{drag} = 5023\ N}$	$\boldsymbol{F_{drag} = 676\ N}$

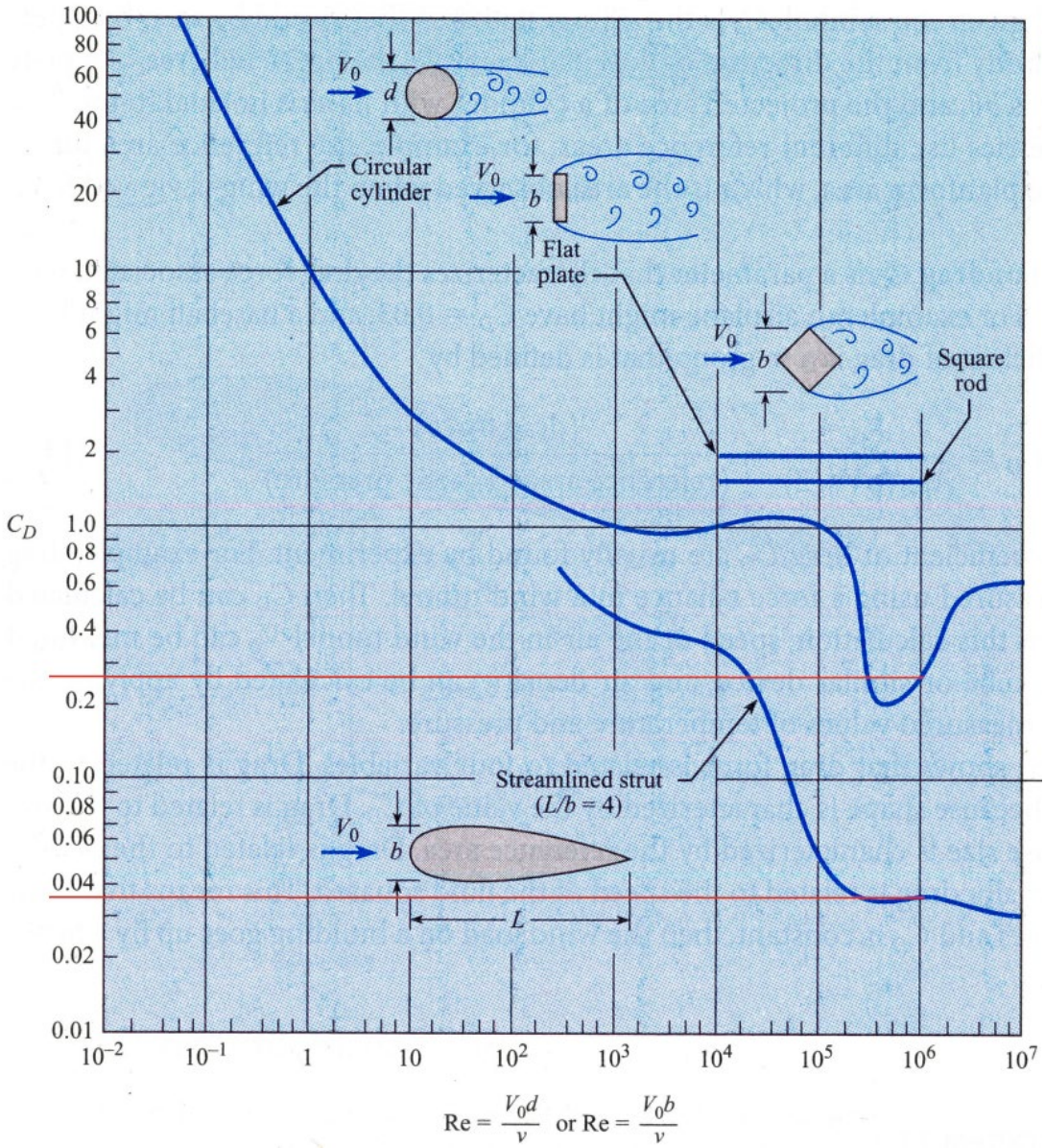
C_D
100
80
60
40
20
10
8
6
4
2
1.0
0.8
0.6
0.4
0.2
0.10
0.08
0.06
0.04
0.02
0.01
10^{-2}
10^{-1}
1
10
10^2
10^3
10^4
10^5
10^6
10^7
V_0
d
Circular cylinder
b
Flat plate
Square rod
Streamlined strut
(L/b = 4)
L
$\mathrm{Re} = \frac{V_0 d}{\nu}$ or $\mathrm{Re} = \frac{V_0 b}{\nu}$

QUESTION 3 (from 2019 Final Exam)

A mining operation wants to use a large rectangular settling tank (see accompanying figure) to remove a very dilute amount of suspended lead oxide particles (specific gravity = 8.3) from an incoming aqueous stream. The basic idea is quite simple – the incoming stream (called influent) enters at the left side of the settling tank and the system is designed so the velocity in the horizontal direction is slow enough to allow the particles to settle to the bottom (called sludge zone) and thus a 'particle-free' stream (called effluent) will exit the tank on the right side.

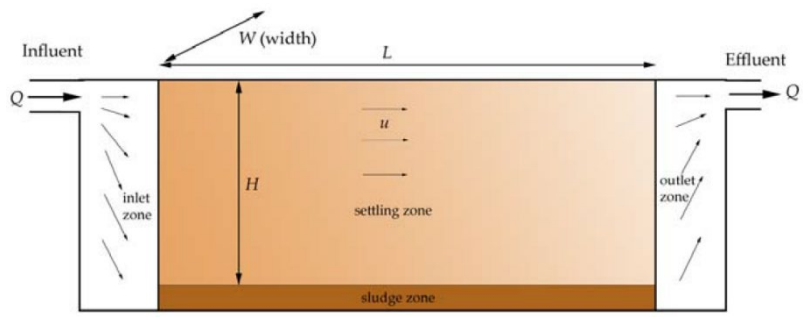

a) Assuming that the lead oxide particles are approximately spherical with an average diameter of 0.025 mm, calculate their terminal settling velocity (m/s). You can assume that the aqueous stream has the same properties of water at 10 °C

STRATEGY #1

Based on the very small size of the particles, it seems likely that the Reynolds number will be very low, which according to Figure 9.11 would indicate we are operating in the "Stokes region" where

$$C_D = \frac{24}{Re}$$

Since we do not know the value of the Reynolds number (because we do not know the settling velocity), lets guess that C_D = 300 (highest value shown on Figure 9.11).

From slide 20 of PDF_06 notes: $$V_t = \sqrt{\frac{4}{3}\frac{(\rho_{particle}-\rho_{fluid})gD_p}{C_D\rho_{fluid}}}$$

$$\rho_{particle} = 8300\ {}^{kg}/_{m^3}$$
$$\rho_{fluid} = 1000\ {}^{kg}/_{m^3}$$
$$D_p = 0.000025\ m$$

	Iteration	V_t (m/s)	$Re = \frac{\rho_{fluid}V_tD_p}{\mu_{fluid}}$
0	Guess C_D = 300	0.00282	0.054
1	Calculate $C_D = \frac{24}{0.054} = 442$	0.00232	0.045
2	Calculate $C_D = \frac{24}{0.045} = 537$	0.00211	0.041
3	Calculate $C_D = \frac{24}{0.041} = 592$	0.00201	0.039
4	Calculate $C_D = \frac{24}{0.039} = 621$	0.00196	0.038
5	Calculate $C_D = \frac{24}{0.038} = 636$	0.00194	**0.037**
6	Calculate $C_D = \frac{24}{0.037} = 644$	0.00192	**0.037**

The calculation has converged (since Re did not change from iteration 5 to 6), and thus the terminal settling velocity of the lead oxide particles is 0.00192 m/s.

STRATEGY #2

Since we do not know the value of the Reynolds number (because we do not know the settling velocity), lets guess that C_D = 0.445 (from Figure 9.11 for region 2000 < Re < 200,000):

From slide 20 of PDF_06 notes: $$V_t = \sqrt{\frac{4}{3}\frac{(\rho_{particle}-\rho_{fluid})gD_p}{C_D\rho_{fluid}}}$$

$$\rho_{particle} = 8300\ {}^{kg}/_{m^3}$$
$$\rho_{fluid} = 1000\ {}^{kg}/_{m^3}$$
$$D_p = 0.000025\ m$$

Iteration		V_t (m/s)	$Re = \frac{\rho_{fluid}V_tD_p}{\mu_{fluid}}$
0	Guess C_D = 0.445	0.0732	1.408
1	Calculate $C_D = 0.28 + \frac{6}{1.408^{0.5}} + \frac{21}{1.408} = 20.2$	0.0108	0.209
2	Calculate $C_D = \frac{24}{0.209} = 115$	0.00456	0.088
3	Calculate $C_D = \frac{24}{0.088} = 274$	0.00295	0.057
4	Calculate $C_D = \frac{24}{0.057} = 422$	0.00238	0.046
… … …			
9		0.00194	**0.037**
10	Calculate $C_D = \frac{24}{0.037} = 644$	0.00192	**0.037**

The calculation has converged (since Re did not change from iteration 9 to 10), and thus the terminal settling velocity of the lead oxide particles is 0.00192 m/s.

STRATEGY #3

Based on the very small size of the particles, it seems likely that the Reynolds number will be very low, which according to Figure 9.11 would indicate we are operating in the "Stokes region" where:

$$C_D = \frac{24}{Re}$$

From slide 20 of PDF_06 notes: $V_t = \sqrt{\frac{4}{3}\frac{(\rho_{particle}-\rho_{fluid})gD_p}{C_D\rho_{fluid}}}$

$$V_t = \sqrt{\frac{4}{3}\frac{(\rho_{particle}-\rho_{fluid})gD_p}{\left(\frac{24}{Re}\right)\rho_{fluid}}}$$

where $Re = \frac{\rho_{fluid}V_tD_p}{\mu_{fluid}}$

and so

$$V_t = \sqrt{\frac{4}{3}\frac{(\rho_{particle}-\rho_{fluid})gD_p}{\left(\frac{24\mu_{fluid}}{\rho_{fluid}V_tD_p}\right)\rho_{fluid}}}$$

$$V_t = \sqrt{\frac{4}{3}(\rho_{particle}-\rho_{fluid})gD_p\left(\frac{V_tD_p}{24\mu_{fluid}}\right)}$$

$$V_t = \sqrt{\frac{1}{18}\frac{(\rho_{particle}-\rho_{fluid})}{\mu_{fluid}}gD_p{}^2V_t}$$

$$V_t = \frac{1}{18}\frac{(\rho_{particle}-\rho_{fluid})}{\mu_{fluid}}gD_p{}^2$$

$$\rho_{particle} = 8300\ {}^{kg}/_{m^3}$$
$$\rho_{fluid} = 1000\ {}^{kg}/_{m^3}$$
$$\mu_{fluid} = 0.0013\ Pa\cdot s$$
$$D_p = 0.000025\ m$$

$$V_t = \frac{1}{18}\frac{(8300-1000)}{0.0013}9.81(0.000025)^2 = 0.00192\ m/s$$

Check Reynolds number assumption

$$Re = \frac{\rho_{fluid}V_tD_p}{\mu_{fluid}} = \frac{1000(0.00192)0.000025}{0.0013} = 0.037$$

Since Re < 1, we are in the "Stokes region" (where $C_D = \frac{24}{Re}$) and thus <u>the terminal settling velocity of the lead oxide particles is 0.00192 m/s.</u>

b) Given that the dimensions of the settling tank are 4 m high, 6 m wide, and 30 m long, determine the longest time (min) that it would take for an average-sized particle to settle to the bottom of the tank.

The longest time would correspond to a particle that has to travel the full vertical distance of the settling tank:

$$settling\ time = \frac{height\ of\ tank}{settling\ velocity} = \frac{4m}{0.00192\,{}^{m}/_{s}} = 2091s = 34.9\ min$$

c) Apply an 'over-design factor' of 2 to your answer in part b) and then use that result to determine the maximum incoming flow rate (m^3/s) of the aqueous stream that can be processed in the rectangular settling tank with given dimensions above.

Design settling time = 2 × (answer from part b) = 4182 s ← this is the hydraulic "residence time" that is required in the tank and thus:

$$Q_{max} = \frac{Volume\ of\ settling\ tank}{design\ settling\ time} = \frac{720m^3}{4182s} = 0.17\,{}^{m^3}/_{s}$$